Gas Stock Pot Burners

Models CE-CN-0533-S, 1060-S

Items 37525, 37529

Instruction Manual

STOP

DO NOT RETURN THIS PRODUCT TO THE STORE

For questions or assistance with this product call OMCAN Toll Free:
1 800 465 0234
Customer Service
or
visit the Support section of
www.omcan.com

Revised - 09/23/2025

Intertek

Toll Free: 1-800-465-0234
Fax: 905-607-0234
Email: service@omcan.com
www.omcan.com

MADE IN CHINA

Table of Contents

Model CE-CN-0533-S / Model CE-CN-1060-S

Section	Page
General Information	3 - 4
Safety and Warranty	4 - 5
Technical Specifications	6
Installation	7 - 8
Operation	9
Maintenance	9
Instructions for Field Conversion between LP & NG	9 - 12
Parts Breakdown	13 - 15
Notes	16 - 18
Warranty Registration	19

General Information

Omcan Manufacturing and Distributing Company Inc., Food Machinery of America, Inc. dba Omcan and Omcan Inc. are not responsible for any harm or injury caused due to any person's improper or negligent use of this equipment. The product shall only be operated by someone over the age of 18, of sound mind, and not under the influence of any drugs or alcohol, who has been trained in the correct operation of this machine, and is wearing authorized, proper safety clothing. Any modification to the machine voids any warranty, and may cause harm to individuals using the machine or in the vicinity of the machine while in operation.

CHECK PACKAGE UPON ARRIVAL

Upon receipt of an Omcan shipment please inspect for external damage. If no damage is evident on the external packaging, open carton to ensure all ordered items are within the box, and there is no concealed damage to the machine. If the package has suffered rough handling, bumps or damage (visible or concealed), please note it on the bill of lading before accepting the delivery and contact Omcan within 24 hours, so we may initiate a claim with the carrier. A detailed report on the extent of the damage caused to the machine must be filled out within three days, from the delivery date shown in the shipping documents. Omcan has no recourse for damaged products that were shipped collect or third party.

Before operating any equipment, always read and familiarize yourself with all operation and safety instructions.

Omcan would like to thank you for purchasing this machine. It's of the utmost importance to save these instructions for future reference. Also save the original box and packaging for shipping the equipment if servicing or returning of the machine is required.

Omcan Fabrication et distribution Companie Limité et Food Machinery d'Amerique, dba Omcan et Omcan Inc. ne sont pas responsables de tout dommage ou blessure causé du fait que toute personne ait utilisé cet équipement de façon irrégulière. Le produit ne doit être exploité que par quelqu'un de plus de 18 ans, saine d'esprit, et pas sous l'influence d'une drogue ou d'acohol, qui a été formé pour utiliser cette machine correctement, et est vêtu de vêtements de sécurité approprié. Toute modification de la machine annule toute garantie, et peut causer un préjudice à des personnes utilisant la machine ou des personnes à proximité de la machine pendant son fonctionnement.

VÉRIFIEZ LE COLIS DÈS RÉCEPTION

Dès réception d'une expédition d'Omcan veuillez inspecter pour dommages externes. Si aucun dommage n'est visible sur l'emballage externe, ouvrez le carton afin de s'assurer que tous les éléments commandés sont dans la boîte, et il n'y a aucun dommage dissimulé à la machine. Si le colis n'a subi aucune mauvaises manipulations, de bosses ou de dommages (visible ou cachée), notez-le sur le bond de livraison avant d'accepter la livraison et contactez Omcan dans les 24 heures qui suivent, pour que nous puissions engager une réclamation auprès du transporteur. Un rapport détaillé sur l'étendue des dommages causés à la machine doit être rempli dans un délai de trois jours, à compter de la date de livraison indiquée dans les documents d'expédition. Omcan n'a aucun droit de recours pour les produits endommagés qui ont été expédiées ou cueilli par un tiers transporteur.

Avant d'utiliser n'importe quel équipement, toujours lire et vous familiariser avec toutes les opérations et les

General Information

consignes de sécurité.

Omcan voudrais vous remercier d'avoir choisi cette machine. Il est primordial de conserver ces instructions pour une référence ultérieure. Également conservez la boîte originale et l'emballage pour l'expédition de l'équipement si l'entretien ou le retour de la machine est nécessaire.

Omcan Empresa De Fabricacion Y Distribucion Inc. Y Maquinaria De Alimentos De America, Inc. dba Omcan y Omcan Inc. no son responsables de ningun daño o perjuicío causado por cualquier persona inadecuada o el uso descuidado de este equipo. El producto solo podra ser operado por una persona mayor de 18 años, en su sano juicio y no bajo alguna influencia de droga o alcohol, y que este ha sido entrenado en el correcto funcionamiento de esta máquina, y ésta usando ropa apropiada y autorizada. Cualquier modificación a la máquina anúla la garantía y puede causar daños a las personas usando la máquina mientras esta en el funcionamiento.

REVISE EL PAQUETE A SU LLEGADA

Tras la recepcion de un envio Omcan favor inspeccionar daños externos. Si no hay daños evidentes en el empaque exterior, Habra el carton para asegurararse que todos los articulos solicitados ésten dentro de la caja y no encuentre daños ocultos en la máquina. Si el paquete ha sufrido un manejo de poco cuidado, golpes o daños (visible o oculto) por favor anote en la factura antes de aceptar la entrega y contacte Omcan dentro de las 24 horas, de modo que podamos iniciar una reclamación con la compañia. Un informe detallado sobre los daños causados a la máquina debe ser llenado en el plazo de tres días, desde la fecha de entrega que se muestra en los documentos de envío. Omcan no tiene ningun recurso por productos dañados que se enviaron a recoger por terceros.

Antes de utilizar cualquier equipo, siempre lea y familiarizarse con todas las instrucciones de funcionamiento y seguridad.

Omcan le gustaría darle las gracias por la compra de esta máquina. Es de la mayor importancia para salvar estas instrucciones para futuras consultas. Además, guarda la caja original y el embalaje para el envío del equipo si servicio técnico o devolución de la máquina que se requiere.

Safety and Warranty

WARNINGS

- Do not store or use gasoline or other flammable vapors or liquids in the vicinity of this or any other equipment.
- Improper installation, adjustment, alteration, service or maintenance can cause property damage, injury or death.
- Read the installation and maintenance instructions thoroughly before installing or servicing this equipment.
- Have the equipment installed by a qualified installer in accordance with all federal, state and local codes.

Safety and Warranty

- Do not install or use without all 4 legs.
- This equipment is for use in non-combustible locations only.
- Do not obstruct the flow of combustion and ventilation air.
- Do not spray controls or the outside of the equipment with liquids or cleaning agents.
- Allow for hot parts to cool before cleaning or moving.
- This equipment should only be used in a flat, level position.
- Do not operate unattended.
- Any loose dirt or metal particles that are allowed to enter the gas lines on this equipment will damage the valve and affect its operation.
- If you smell gas, follow the instructions provided by the gas supplier. Do not try to light the burner; do not use a telephone within close proximity.
- Never attempt to move grate while cooking.

Disclaimer: manifold pressures need to be checked upon installation and need to match rating plate provided on the unit.

RESIDENTIAL USERS: vendor assumes no liability for parts or labor coverage for component failure or other damages resulting from installation in non-commercial or residential applications. The right is reserved to deny shipment for residential usage; if this occurs, you will be notified as soon as possible.

1 YEAR PARTS AND LABOUR WARRANTY

Within the warranty period, contact Omcan Inc. at 1-800-465-0234 to schedule an Omcan authorized service technician to repair the equipment locally.

Unauthorized maintenance will void the warranty. Warranty covers electrical and part failures, not improper use.

Please see https://omcan.com/disclaimer for complete info.

WARNING:

The packaging components are classified as normal solid urban waste and can therefore be disposed of without difficulty.

In any case, for suitable recycling, we suggest disposing of the products separately (differentiated waste) according to the current norms.

DO NOT DISCARD ANY PACKAGING MATERIALS IN THE ENVIRONMENT!

Technical Specifications

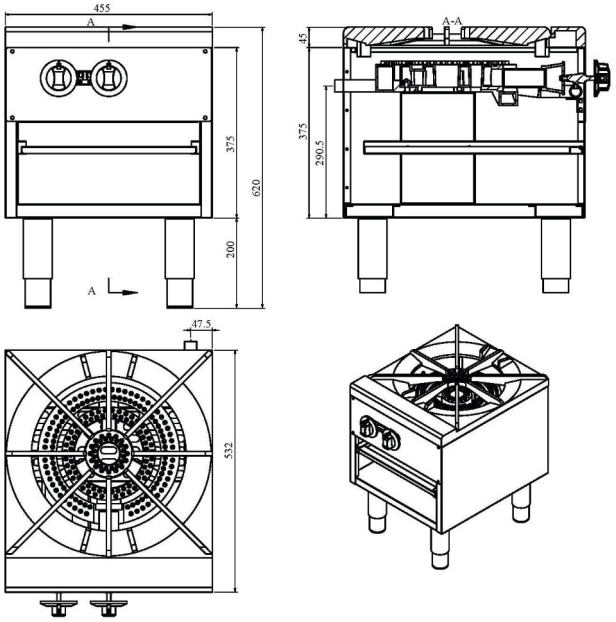

Fig 1. Model CE-CN-0640-S

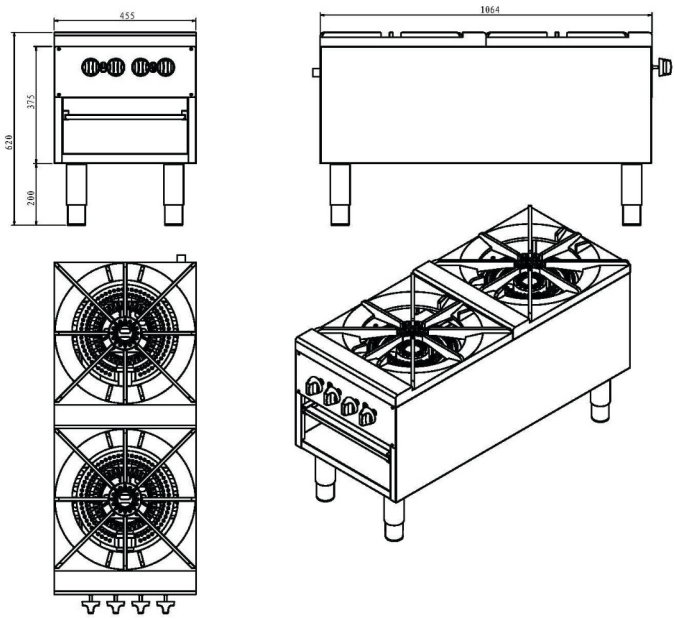

Fig 2. Model CE-CN-1060-S

Model	CE-CN-0533-S	CE-CN-1060-S
Item Number	37525	37529
Number of Burners	1	2
B.T.U.	100,000	200,000
Temperature Range	50 - 300°C / 122 - 572°F	
Dimensions	20.9” x 18.1” x 24.4” 530 x 460 x 620mm	41.7” x 18.1” x 24.4” 1060 x 460 x 620mm
Packaging Dimensions	40” x 24” x 30” / 1016 x 610 x 762mm	48” x 40” x 28” / 1219 x 1016 x 711mm
Weight	103.6 lbs. / 47 kgs.	191.8 lbs. / 87 kgs.
Packaging Weight	140 lbs. / 63.5 kgs.	249.1 lbs. / 113 kgs.

These kinds of gas stoves can be operated by LPG or natural gas. You may replace the nozzles. But please contact Omcan for details of diameter of nozzles. The nozzles are included with the stove or can be ordered from manufacturer. The slightest difference in diameter would influence the performance of the burners.

Installation

INSTALLATION TO BE DONE BY LICENSED PROFESSIONALS ONLY.

SET UP

1. Remove all packing material and tape, as well as any protective plastic from the equipment.
2. Place the equipment in the desired position and height.
3. Install the four (4) legs onto the equipment.
4. Clean and dry the equipment thoroughly before using.

INSTALLATION

The installation of this equipment must conform with local codes, or with the National Gas Code, ANSIZ223.1/ NFPA 54, or the Natural Gas and Propane Installation Code, CSA B149.1, as applicable.

- The equipment and its individual shutoff valve must be disconnected from the gas supply piping system during any pressure testing of that system at test pressures in excess of ½ psi (3.5 kPa).
- The equipment must be isolated from the gas supply piping system by closing its individual manual shutoff valve during any pressure testing of the gas supply piping system at test pressures equal to or less then ½ psi (3.5 kPa).

CLEARANCE AND POSITIONING AROUND EQUIPMENT

- This equipment must be installed adjacent to non-combustible surfaces only with a minimum spacing of 0” from all sides and 4” from non-combustible counters with 8” legs.

AIR SUPPLY AND VENTILATION

- The area in front and around the equipment must be kept clear to avoid any obstruction of the flow of combustion and ventilation air.
- Adequate clearance must be maintained at all times in front of and at the sides of the equipment for servicing and proper ventilation.

PRESSURE REGULATOR

- All commercial cooking equipment must have a pressure regulator on the incoming service line for safe and efficient operation. The regulator provided for this equipment is adaptable for both natural gas and LP gas.
- Regulator specifications: ¾” NPT inlet and outlet, factory adjusted for 5” WC natural gas standard and may be converted by qualified personnel to be used for propane at 10” WC.

Installation

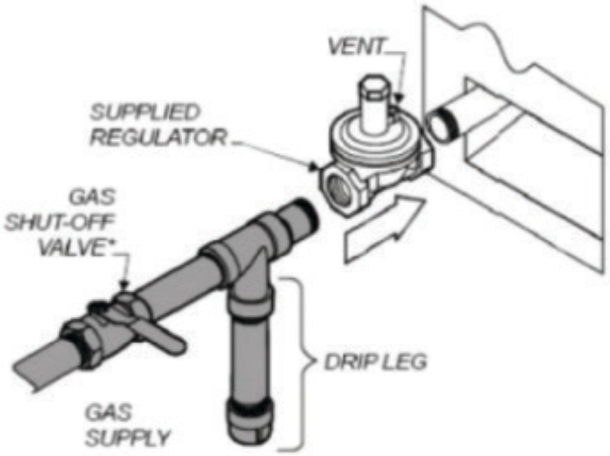

Fig 3. Gas Connection Diagram

Prior to connecting the regulator, check the incoming line pressure. The regulator can only withstand a maximum pressure of ½ PSI (14” WC). If the line pressure is beyond this limit, a step down the regulator before the regulator provided will be required. The arrow on the bottom shows gas flow direction and should point downstream to the equipment.

LIGHTING THE PILOT

The manifold units are equipped with standing pilots and each should be lit immediately after the gas is supplied to the equipment.

1. Before attempting to light the pilots, turn off the main gas valve to the equipment and wait 5 minutes to clear the gas.
2. Turn off all gas control knobs.
3. Turn on control valve and light all pilots.
4. The pilot burner must be lit at the end of the tube. Hold an ignition source through the pilot light hole in the front panel at the pilot tube. When the flame ignites remove ignition source.
5. Turn off the main gas valve to shut down the equipment.

Smoke appearing on initial use of the equipment is normal. This is a result of the rust preventative coating burning off. Allow the equipment to “burn in” for at least 15 minutes before the first use.

PILOT FLAME REGULATION

- The pilot flame on the equipment has been factory adjusted. When adjustment is necessary, adjust the pilot flames as small as possible but high enough to light the burner. Immediately after, turn the burner valve to the highest setting. Access to the pilot flame adjustment screw is obtained by removing the front panel.

BURNER ADJUSTMENT

- Remove the front panel to gain access. Turn burner valve knob to highest setting. Slowly decrease mixing ring aperture to give a soft blue flame having luminous tips. Then slowly increase opening to a point where the yellow tips disappear and a hard blue flame is obtained.

Operation

Before initial use, turn the gas control knob to the maximum setting and allow the equipment to burn-in for 15 minutes. Seeing smoke coming from the cooking surface is normal during burn-in. After 15 minutes of burn-in, equipment is ready for use.

1. Hold the leg and rotate the adjustable feet so the equipment is level.
2. Check the drip tray frequently and add water as necessary.
3. To ignite the burner, press and turn the gas control knob to high position.
4. Allow the equipment to pre-heat before attempting to use.
5. Adjust the valve set-point to obtain the desired level of heat.

Maintenance

- A qualified service company should check the unit for safe and efficient operation on an annual basis.
- Gas piping shall be a certain size and installed to provide a supply of gas sufficient to meet the full gas input of the equipment.
- A manual shut off valve should be installed upstream from the manifold within 4 ft. (1.2m) of the equipment and in a position where it can be reached in the event of an emergency.
- Check entire gas piping system for leaks every so often. Using a gas leak detector or soapy water solution is recommended.
- Install equipment under efficient exhaust hood with flameproof filters with a distance of no less than 4 feet between the top of the equipment and the filters or any other combustible materials.

CLEANING

To maintain the appearance and increase the service life, clean your equipment daily. DO NOT clean equipment with steel wool.

1. Allow the equipment to cool completely before cleaning.
2. Using a wire brush, scrape the grill grate(s) to remove any food residue.
3. To clean equipment, use either a damp cloth, sponge with soapy water or a metal scraper.
4. Dry grates thoroughly to prevent rusting.
5. Empty and clean the drip tray.

Instructions for Field Conversion between LP & NG

GAS CONVERSION OF STOCK POT BURNER

- Conversion from natural gas to liquid propane (LP) or vice versa may only be performed by the factory or its authorized service agent. In case of troubleshooting, ensure the correct orifice sizes of the spuds have

Instructions for Field Conversion between LP & NG

been provided.

- Natural gas orifice is #31.
- Liquid propane gas orifice is #52.
- Orifice size is marked on the spud.

MANDATORY MARKINGS

Below are examples of the rating labels that must be fixed to the rear of the unit on completion of the conversion by the installer.

Rating Plate

CONVERSION BY QUALIFIED SERVICE AGENCY

THIS APPLIANCE WAS CONVERTED ON :

day_____ month_____ year_____

To LPG gas with KIT # : _____

By : company name _____

address : _____

_____

_____

Which accepts the responsibility that this conversion has been properly made

Installation Plate

LPG GPL

CLEARANCES
ESPACES LIBRES

FOR LP GAS WHEN EQUIPPED WITH NO. 54 DRILL SIZE ORIFICE
POUR LP GAZ LORSQU'ÉQUIPÉ AVEC UNE OUVERTURE DE TAILLE DE MÈCHE NO. 54

MAN.PRESS. / PRESS.MAN. 10.0 INCH W.C.

BTU CONSOMMATION /HR 80000 BTU INPUT/HR

BACK ARRIÈRE	6"
RT SIDE COTE DROIT	6"
LT SIDE COTE GAUCHE	6"

FOR USE IN NON COMBUSTIBLE LOCATIONS ONLY
DOIT ETRE UTILISE SEULEMENT DANS DES LOCAUX NON INFLAMMABLES
COMPLIES WITH ANSI Z83.11b / CSA 1.8b -2009 , FOOD SERVICE EQUIPMENT
For your safety refer to installation instructions for conversion proceedure

CAUTION: ENSURE THE GAS SUPPLY IS SHUT OFF AT THE MANUAL SHUT OFF VALVE BEFORE PROCEEDING WITH THE CONVERSION.

Instructions for Field Conversion between LP & NG

1. Switch off the gas at the main supply valve and allow the unit to cool down before commencing with the conversion.
2. Lift off the complete grill plate assembly to expose the burners and valves.
3. Remove the burners by loosening the fastening nuts located under the rear of the burner, lift the rear of the burner and slide backwards.
4. The brass orifice located on the end of the control valve may now be loosened and removed using a 1/2” wrench. Replace with the new orifice from the conversion kit, first applying a small amount of jointing paste to the threat on the end of the valve, this will ensure a good gas tight seal.
5. Replace the burner by sliding the open end over the orifice and then locating the M5 stud through the slot in the support bracket. Secure by replacing the M5 nut.
6. Replace the burner by sliding the open end over the orifice and then locating the M5 stud through the slot in the support bracket. Secure by replacing the M5 nut.
7. To operate with LP gas the regulator must be changed to operate at 10” WC. To do this remove the converter cap and pin from the regulator, remove the pin and invert then reinstall in the cap. Replace the cap on the regulator taking care that the gasket is in place on the cap.
8. Prior to connecting the regulator, check the incoming line pressure, as the regulators can only withstand a maximum pressure of 1/2 PSI (13” WC). If the line pressure is beyond this limit, a step down regulator will be required. The arrow forged into the bottom of the regulator body shows gas flow direction, and should point downstream to the appliance.
9. Check for gas leaks regularly. A soapy water solution is recommended for locating gas leakage. Matches, candle flame or other sources of ignition shall not be used for this purpose.
10. Replace the loose fitting grill plate assembly into position.
11. Fix the conversion rating plate supplied in the kit adjacent to the original rating plate on the rear of the unit. Fill in the details required on the installation plate and fix to the rear of the unit.

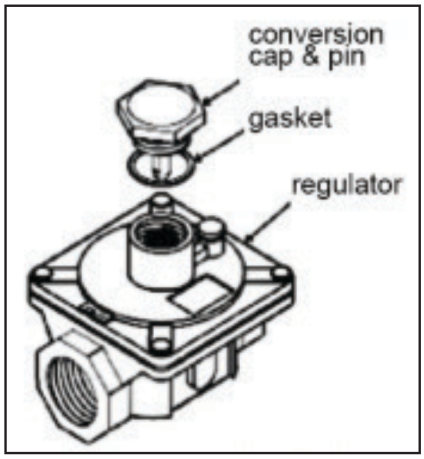

Fig 4. Gas Pressure Regulator

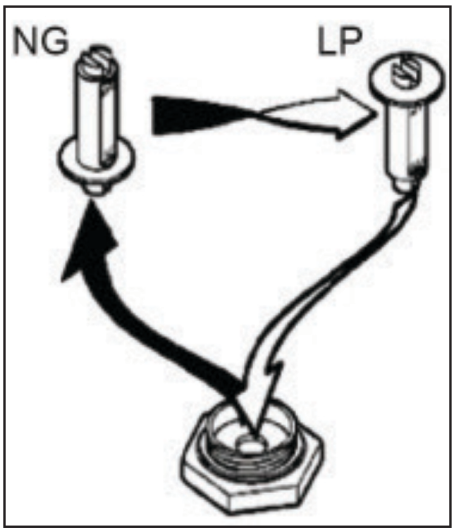

Fig 5. Conversion

Setting the pilot burner:

When changing from natural gas to LPG it is necessary to adjust the pilot burner flame as well. This is done in

Instructions for Field Conversion between LP & NG

the following steps:

1. Remove the control knobs from the front of the unit, loosen the screws holding the front panel and remove.
2. The pilot burner valve is positioned to the right of the control valve, a small adjustment screw is located on the front face of the valve body. This can be turned in or out with a small flat screw driver.
3. Adjust the screw in small increments whilst the pilot flame is burning until a small stable flame is achieved.
4. Replace the front panel and secure, refit the control knobs.

Parts Breakdown

Model CE-CN-0533-S 37525

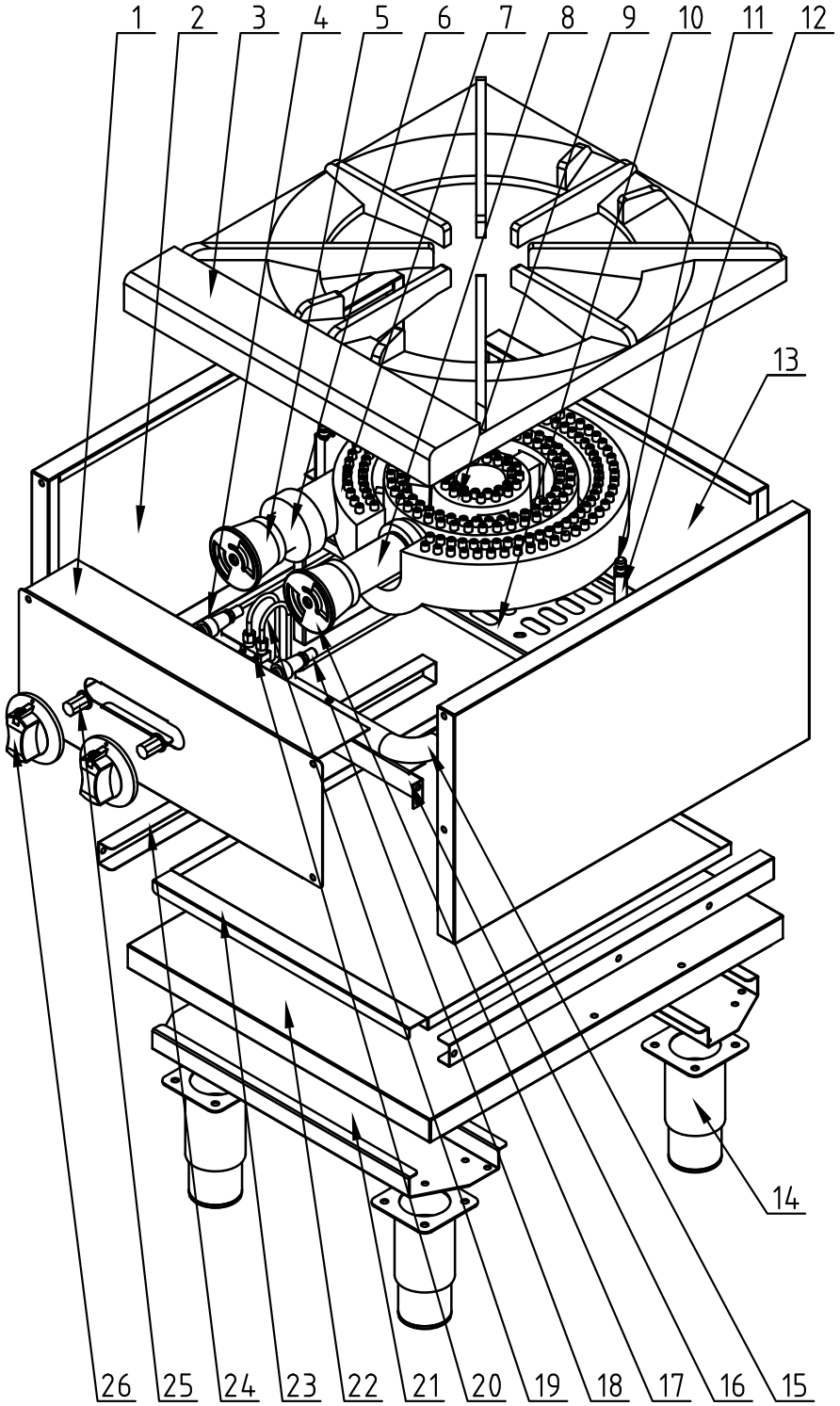

Parts Breakdown

Model CE-CN-1060-S 37529

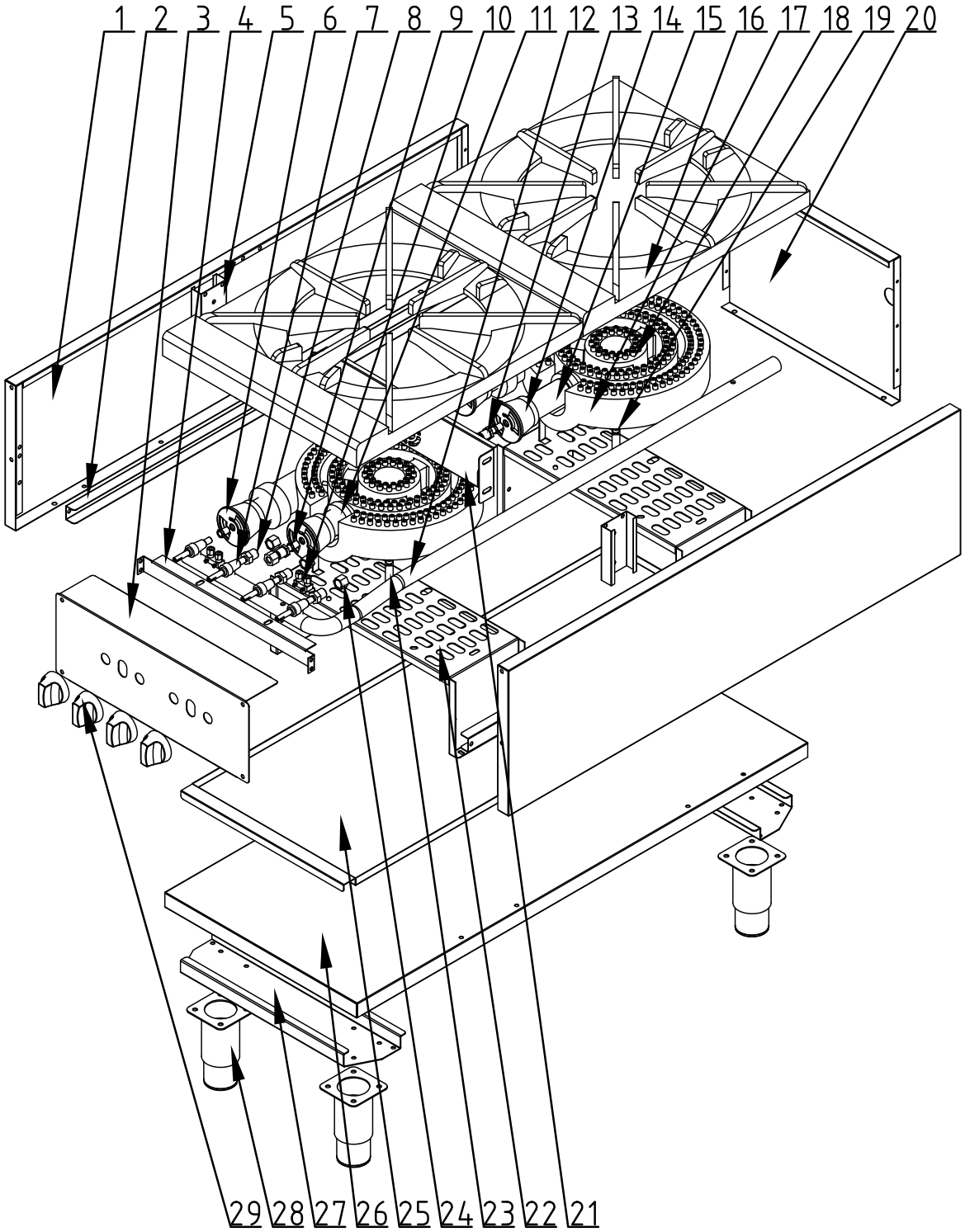

Parts Breakdown

Model CE-CN-0533-S 37525

Item No.	Description	Position
70222	FRONT PANEL FOR 37525	1
70223	BODY SIDES FOR 37525	2
70224	TOP GRATES FOR 37525	3
70225	GAS VALVE FOR 37525	4
70226	CONNECTOR FOR 37525	5
70227	EJECTOR TUBE-SHORT FOR 37525	6
70228	OUTER BURNER FOR 37525	7
70229	EJECTOR TUBE-LONG FOR 37525	8
70230	INNER BURNER FOR 37525	9

Item No.	Description	Position
70231	BURNER SUPPORTER FOR 37525	10
70232	STANDING PILOT FOR 37525	11
70233	PILOT SUPPORTER FOR 37525	12
70234	REAR PANEL FOR 37525	13
70235	ADJUSTABLE FEET FOR 37525	14
70236	GAS PIPE FOR 37525	15
70237	INLET PIPE SUPPORT FOR 37525	16
70238	ADJUSTABLE REGULATOR FOR 37525	17
70239	NOZZLE FOR 37525	18

Item No.	Description	Position
70240	PILOT COPPER TUBE WITH VALVE ASSEMBLY - SHORT (52CM) FOR 37525	19
70241	GAS PILOT VALVE FOR 37525	20
70242	PLATE FOR FEET FOR 37525	21
70243	LOWER BODY PANEL FOR 37525	22
70244	DRIP PAN FOR 37525	23
70245	DRIP PAN RAIL FOR 37525	24
70246	KNOB STEM FOR 37525	25
43489	RED DIAL FOR MANUAL CONTROL FOR 37525	26

Model CE-CN-1060-S 37529

Item No.	Description	Position
70248	BODY SIDES FOR 37529	1
70249	DRIP PAN RAIL FOR 37529	2
70250	FRONT PANEL FOR 37529	3
70237	INLET PIPE SUPPORT FOR 37529	4
70252	BODY SIDES SUPPORT FOR 37529	5
70238	ADJUSTABLE REGULATOR FOR 37529	6
70225	GAS VALVE FOR 37529	7
70255	NOZZLE JOIN PART A FOR 37529	8
70239	NOZZLE FOR 37529	9
70257	GAS PILOT VALVE FOR 37529	10

Item No.	Description	Position
70227	EJECTOR TUBE-SHORT FOR 37529	11
70259	GAS PIPE FOR 37529	12
70260	NOZZLE JOIN PART B FOR 37529	13
70226	CONNECTOR FOR 37529	14
70229	EJECTOR TUBE-LONG FOR 37529	15
70224	TOP GRATES FOR 37529	16
70228	OUTER BURNER FOR 37529	17
70230	INNER BURNER FOR 37529	18
70232	STANDING PILOT FOR 37529	19
70234	REAR PANEL FOR 37529	20

Item No.	Description	Position
70268	NOZZLE SUPPORTER FOR 37529	21
70231	BURNER SUPPORTER FOR 37529	22
70233	PILOT SUPPORTER FOR 37529	23
70271	M16 X 1.25 NUT WITH DIA 10 FOR 37529	24
70272	DRIP PAN FOR 37529	25
70273	LOWER BODY PANEL FOR 37529	26
70242	PLATE FOR FEET FOR 37529	27
70235	ADJUSTABLE FEET FOR 37529	28
43489	RED DIAL FOR MANUAL CONTROL FOR 37529	29

Notes

Notes

Notes

Warranty Registration

Thank you for purchasing an Omcan product. To register your warranty for this product, complete the information below, tear off the card at the perforation and then send to the address specified below. You can also register online by visiting:

Merci d'avoir acheté un produit Omcan. Pour enregistrer votre garantie pour ce produit, complétez les informations ci-dessous, détachez la carte au niveau de la perforation, puis l'envoyer à l'adresse spécifié ci-dessous. Vous pouvez également vous inscrire en ligne en visitant:

Gracias por comprar un producto Omcan usted. Para registrar su garantía para este producto, complete la información a continuación, cortar la tarjeta en la perforación y luego enviarlo a la dirección indicada a continuación. También puede registrarse en línea en:

https://omcan.com/warranty-registration/

For mailing in Canada

Pour postale au Canada

Por correo en Canadá

OMCAN
PRODUCT WARRANTY REGISTRATION
3115 Pepper Mill Court,
Mississauga, Ontario
Canada, L5L 4X5

For mailing in the US

Pour diffusion aux États-Unis

Por correo en los EE.UU.

OMCAN
PRODUCT WARRANTY REGISTRATION
4450 Witmer Industrial Estates, Unit 4,
Niagara Falls, New York
USA, 14305

or email to: service@omcan.com

Purchaser's Information

Name: _____

Address: _____

City: _____ Province or State: _____ Postal or Zip: _____

Country: _____

Dealer from which Purchased: _____

Dealer City: _____ Dealer Province or State: _____

Invoice: _____

Company Name: _____

Telephone: _____

Email Address: _____

Type of Company:

☐ Restaurant ☐ Bakery ☐ Deli

☐ Butcher ☐ Supermarket ☐ Caterer

☐ Institution *(specify)*: _____

☐ Other *(specify)*: _____

Model Name: _____ Model Number: _____

Machine Description: _____

Date of Purchase (MM/DD/YYYY): _____

Serial Number: _____

Date of Installation (MM/DD/YYYY): _____

Would you like to extend the warranty? ☐ Yes ☐ No

Thank you for choosing Omcan | Merci d'avoir choisi Omcan | Gracias por elegir Omcan

Since 1951 Omcan has grown to become a leading distributor of equipment and supplies to the North American food service industry. Our success over these many years can be attributed to our commitment to strengthen and develop new and existing relationships with our valued customers and manufacturers. Today with partners in North America, Europe, Asia and South America, we continually work to improve and grow the company. We strive to offer customers exceptional value through our qualified local sales and service representatives who provide convenient access to over 6,500 globally sourced products.

Depuis 1951 Omcan a grandi pour devenir un des “leaders” de la distribution des équipements et matériel pour l’industrie des services alimentaires en Amérique du Nord. Notre succès au cours de ces nombreuses années peut être attribué à notre engagement à renforcer et à développer de nouvelles et existantes relations avec nos clients et les fabricants de valeur. Aujourd’hui avec des partenaires en Amérique du Nord, Europe, Asie et Amérique du Sud, nous travaillons continuellement à améliorer et développer l’entreprise. Nous nous efforçons d’offrir à nos clients une valeur exceptionnelle grâce à nos ventes locales qualifiées et des représentants de service qui offrent un accès facile à plus de 6500 produits provenant du monde entier.

Desde 1951 Omcan ha crecido hasta convertirse en un líder en la distribución de equipos y suministros de alimentos en América del Norte industria de servicios. Nuestro éxito en estos años se puede atribuir a nuestro compromiso de fortalecer y desarrollar nuevas relaciones existentes con nuestros valiosos clientes y fabricantes. Hoy con socios de América del Norte, Europa, Asia y América del Sur, que trabajan continuamente para mejorar y crecer la empresa. Nos esforzamos por ofrecer a nuestros clientes valor excepcional a través de nuestro local de ventas y representantes de los servicios que proporcionan un fácil acceso a más de 6,500 productos con origen a nivel mundial.