OMCAN

COOKING EQUIPMENT

SINGLE & DOUBLE GAS STOCK POT

Item: 37525 / 37529

Model: CE-CN-0533-S / CE-CN-1060-S

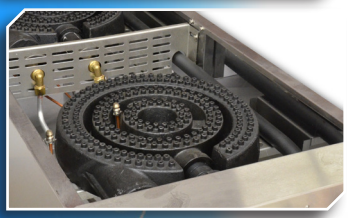

Feature:

- Material: Stainless steel
- Equipped with flame out protector
- Cast iron burner
- Burner With stainless steel drip pans
- Smooth appearance and arc-shaped edge design, easy to clean

*** Field convertible propane kit included**

***Gas conversion to be completed by approved gas field technician**

Intertek

MADE IN CHINA

Authorized Dealer

COOKING EQUIPMENT
SINGLE & DOUBLE GAS STOCK POT

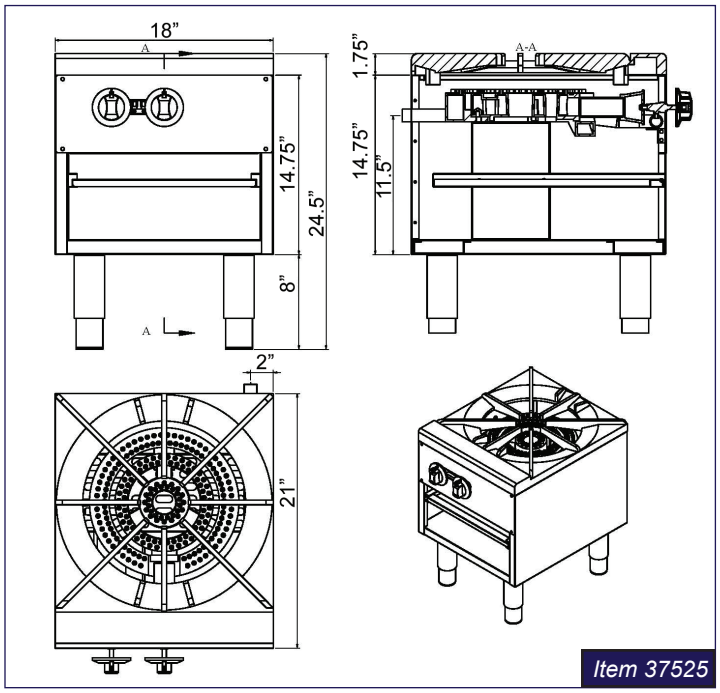

Item 37525

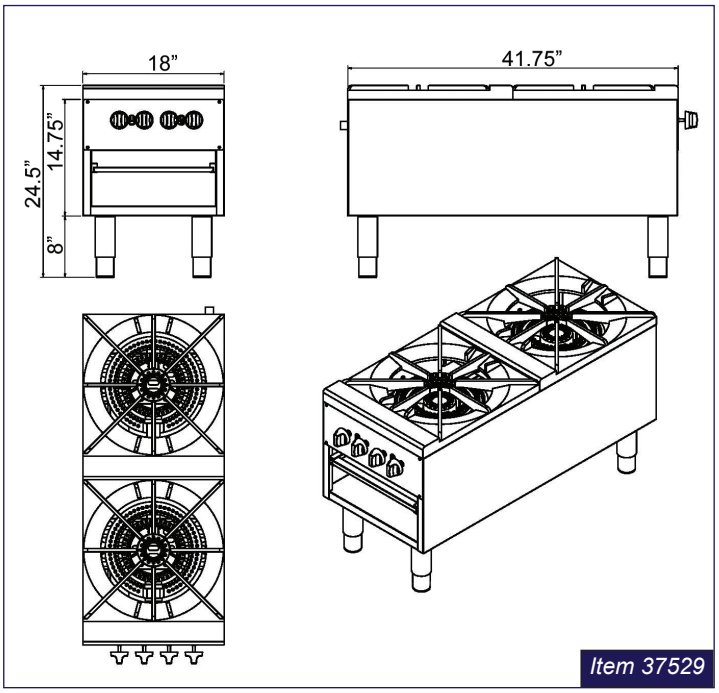

Item 37529

TECHNICAL SPECIFICATION	*Single Gas Range with 100,000 B.T.U.*	*Double Gas Range with 200,000 B.T.U.*
ITEM NUMBER	37525	37529
MODEL	CE-CN-0533-S	CE-CN-1060-S
NUMBER OF BURNERS	1 unit (3 ring), 2 valves	2 units (3 ring/unit), 4 valves
B.T.U.	100,000 BTU	200,000 BTU
TEMPERATURE RANGE	50 - 300°C / 122 - 572°F	50 - 300°C / 122 - 572°F
NET DIMENSIONS	21” x 18” x 24.5”/ 530 x 460 x 620 mm	41.75” x 18” x 24.5” / 1060 x 460 x 620 mm
GROSS DIMENSIONS	40” x 24” x 30”/ 1016 x 609.6 x 762 mm	48” x 40” x 28”/ 1219 x 1016 x 711 mm
NET WEIGHT	103.4 lbs/ 47 kg	191.4 lbs/ 87 kg
GROSS WEIGHT	140 lbs/ 63.5 kg	250 lbs/ 113 kg

OMCAN INC.
Telephone: 1-800-465-0234
Fax: (905) 607-0234
E-mail: sales@ omcan.com
Website: www.omcan.com

CELEBRATING MORE THAN 60 YEARS OF SERVICE
60
EST 1951

Follow us to keep up to date with the latest news and offers